Technical sheet :

MBL 745 HT (BSV)

Manitou is committed to bringing value to its backhoe loaders by incorporating advanced and robust features for multi-application capabilities.MBL 745 HT is powered by a BS-V turbocharged, high torque (400Nm) with a 74.8 hp engine for better fuel efficiency and reduced emissions. MBL 745 HT is powered with a 4WD for rough terrains and comes with various options such as AC.

MANITOU
HANDLING YOUR WORLD

Capacities		Metric
Wheelbase 2 wheels drive		2185 mm
Wheelbase 4 wheels drive		2140 mm
Weight and dimensions		
Unladen weight with 2 WD		7860 kg
Unladen weight with 2 WD 7 in 1		8150 kg
Unladen weight with 4 WD		7955 kg
Unladen weight with 4 WD 7 in 1		8245 kg
Overall length	l1	7290 mm
Overall width	b1	2330 mm
Cabin height	h6	2900 mm
Overall height	h17	3790 mm
External turning radius over tyres (braked) / External turning radius over tyres (braked) 4WD	Wa1	3.30 m / 3.85 m
External turning radius over tyres (unbraked) / External turning radius over tyres (unbraked) 4WD	Wa1	4.30 m / 4.20 m
External turning radius over bucket (braked) / External turning radius over bucket (braked) 4WD	Wa5 / Wa5	5 m / 5.55 m
External turning radius over bucket (unbraked)	Wa5	5.75 m
Standard tires front / rear		9 x 16 - 16 PR / 16.9 x 28-12PR
Optional tires (front / rear)		9 x 16 - 16 PR / 12.5 x 18 - 12 PR / 14.0 x 25 - 20 PR / 16.9 x 28 - 12 PR
Reach at travelling	c2	2030 mm
Rear axle center to slew center	c3	1308 mm
Ground clearance	m4	315 mm
Performances		
Travel speed forward 1st / 2nd		5.40 km/h / 8.60 km/h
Travel speed forward 3rd / 4th		19.90 km/h / 40 km/h
Engine		
Engine brand		M&M
Engine model / norm		MCVNC35TI074CE5A Turbocharged CEV BS-V - BS-V
Displacement		3.50 l
Engine power (kW) / Gross Power		55 kW @ 2200 rpm
Max. torque / Engine rotation		400 Nm @ 1200 rpm
Battery voltage / capacity		12 V / 165 Ah
Transmission		
Transmission brand		Carraro
Number of gears (forward / reverse)		4 / 4
Torque converter stall ratio		2.64:1
Service brake		Wet disc brakes
Hydraulics		
Hydraulic flow		119 l/min
Main relief pressure		225 bar
Hydraulic pump type		Gear pump
Tank capacities		
Hydraulic oil		75 l
Cooling liquid		16 l
Fuel		130 l
Transmission oil		17.50 l
Engine oil		13.50 l
Oil rear axle		17.10 l
Oil rear axle 4WD		17.50 l
Bucket		
Backhoe standard capacity		0.27 m³
Width backhoe bucket		889 mm
Loader standard capacity		1 m³
Width loader bucket		2235 mm
Miscellaneous		
Power steering		Yes
Front steer axle of oscillation 2WD		20 °
Front steer axle of oscillation 4WD		16 °
Steering wheels (front / rear)		2 / 2

Performance backhoe

	Standard dipper
p1 - Max dig depth (mm)	4741
r1 - Max reach ground level to slew center (mm)	5730
r2 - Max loading reach (mm)	1996
Max operating height (mm)	5626
Max loading height (mm)	3871
p2 - Max straight wall dig depth (mm)	2602
a10 - Max bucket rotation (°)	194
Total side shift (mm)	1198
Dipper tearout (kgF)	3942
Bucket tearout (kgF)	5810
Hydraulic lift capacity (kg)	1460

Performance loader

	Standard shovel
Max dump angle (°)	51
h26 - Max operating height (loader version) (mm)	4230
h23 - Max dump height at 45° (mm)	2780
h24 - Max loadover height (mm)	3310
h25 - Max hinge pin height (mm)	3570
r3 - Max reach at full height 45° (mm)	710
p3 - Below ground dig depth (mm)	156
a13 - Rollback at ground (°)	45
Shovel breakout (kgf)	5229
Arms breakout (kgF)	4691
Lifting capacity at full height (kg)	3467

MBL 745 HT (BSV) - Dimensional drawing

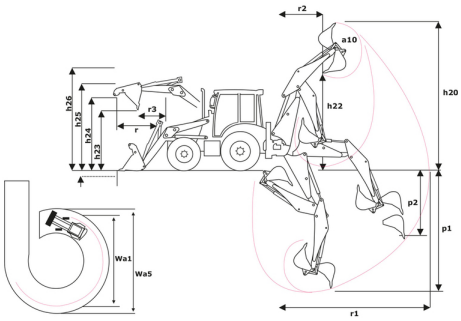

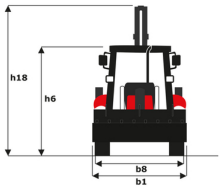

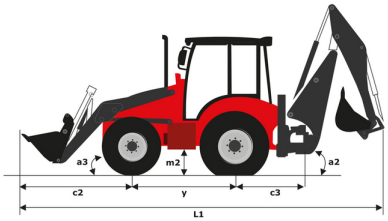

Head Office
B.P. 249 - 430 rue de l'Aubinière
44150 Ancenis Cedex - France
Tel: +33 (0)2 40 09 10 11 - Fax: +33 (0)2 40 09 10 97
www.manitou.com

This publication provides a description of the configuration versions and options for Manitou products, which may differ for equipment. The equipment presented in this brochure may be part of a series, as an option, or it may not be available, depending on the versions. Manitou reserves the right, at any time and without notice, to amend the specifications described and represented. The specifications provided do not bind the manufacturer. For more details, please contact your Manitou agent. This is not a contractually binding document. The presentation of the products is not contractually binding. List of specifications non-exhaustive. The logos as well as the visual identity of the company are owned by Manitou and cannot be used without authorisation. All rights reserved. The photos and diagrams contained in this brochure are only provided for consultation and information purposes.
MANITOU BF SA - Limited company with board of directors - Share capital: 39,668,399 euros - 857 802 508 RCS Nantes